Feb.1.2026 Copyright 2026 HIROSE ELECTRIC CO., LTD. All Rights Reserved.
In case of consideration for using Automotive equipment / device which demand high reliability, kindly contact our sales window correspondents.

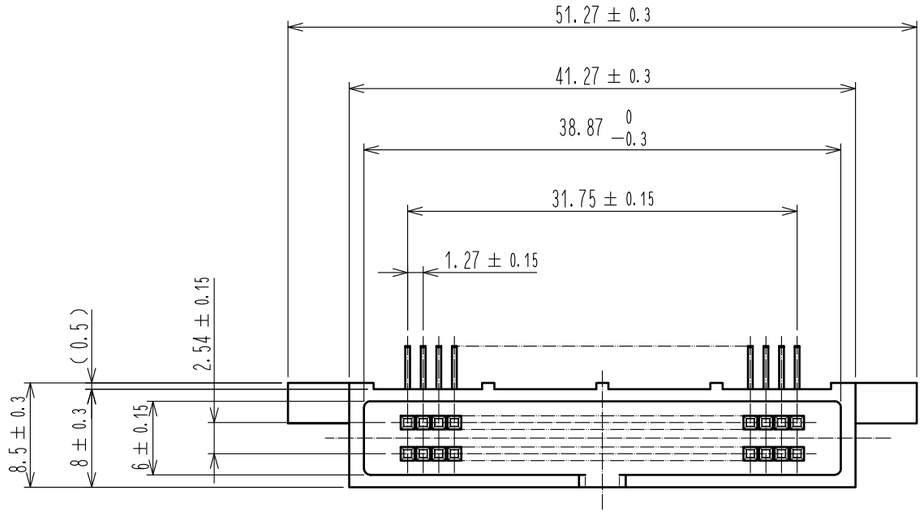

Recommended PC board hole pattern (mounting side)

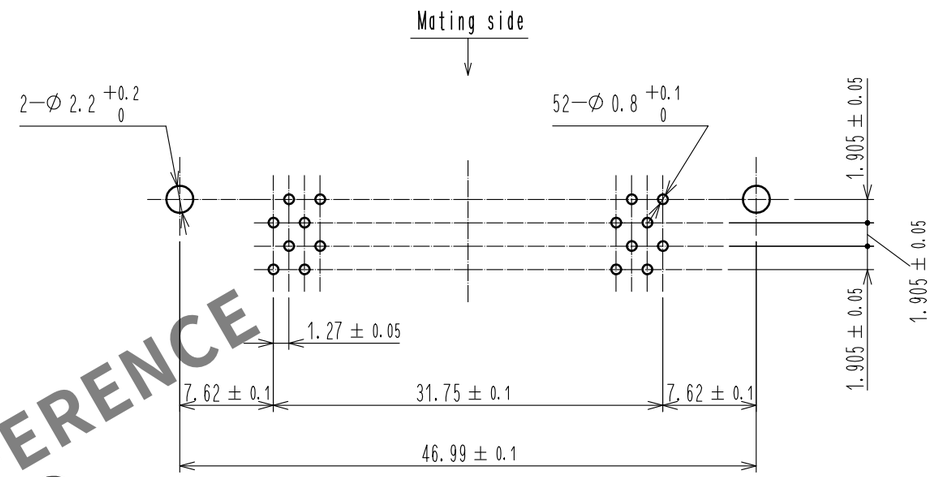

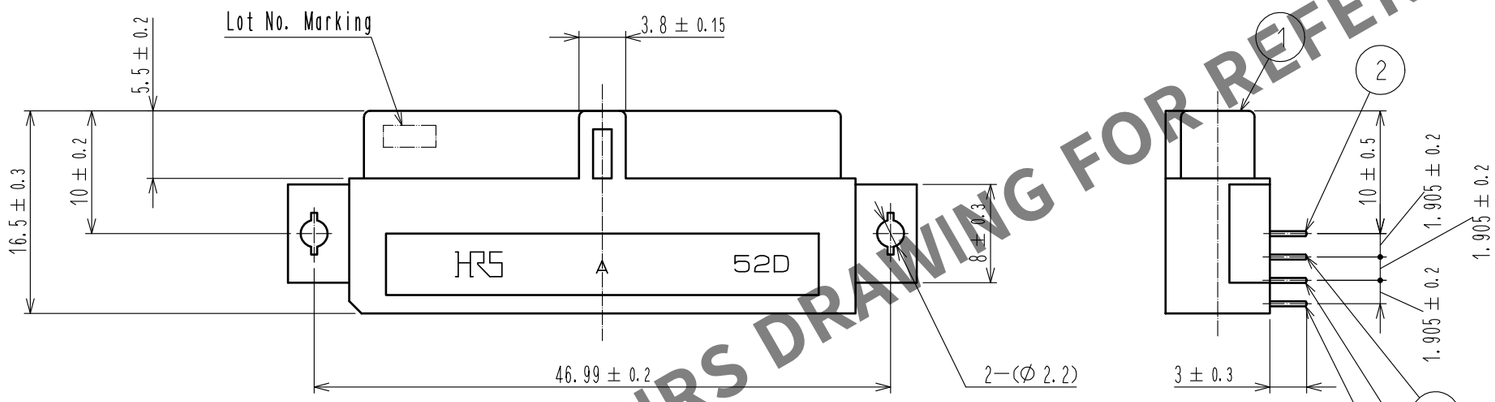

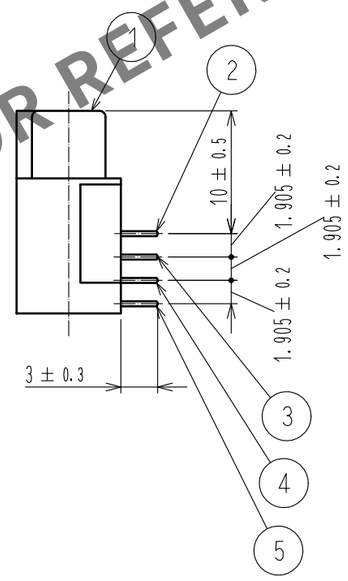

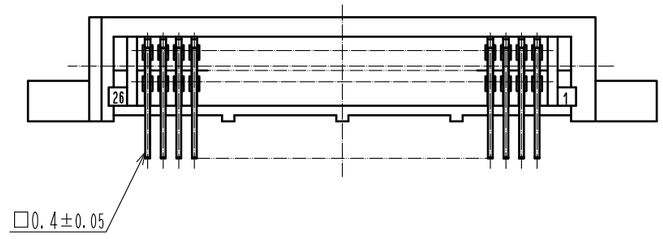

Notes 1 The dimensions in parentheses are for reference.

NO.	MATERIAL	FINISH , REMARKS	NO.	MATERIAL	FINISH , REMARKS
3	PHOSPHOR BRONZE	Contact area : Gold 0.2μm min Dip area : TIN-Plating 2μm min Under plating : Nickel 2.5μm min	5	PHOSPHOR BRONZE	Contact area : Gold 0.2μm min Dip area : TIN-Plating 2μm min Under plating : Nickel 2.5μm min
2	PHOSPHOR BRONZE	Contact area : Gold 0.2μm min Dip area : TIN-Plating 2μm min Under plating : Nickel 2.5μm min	4	PHOSPHOR BRONZE	Contact area : Gold 0.2μm min Dip area : TIN-Plating 2μm min Under plating : Nickel 2.5μm min
1	PBT	BLACK UL94V-0			

UNITS	SCALE	COUNT	DESCRIPTION OF REVISIONS	DESIGNED	CHECKED	DATE
mm	2 : 1	0				

HIROSE ELECTRIC CO., LTD.

APPROVED	HT. YAMAGUCHI	18. 06. 25	DRAWING NO.	EDC-019028-71-21
CHECKED	HT. YAMAGUCHI	18. 06. 25	PART NO.	HIF6B-52DA-1.27DS(71)
DESIGNED	TY. EDAGAWA	18. 06. 25		
DRAWN	MK. OOKI	18. 06. 21	CODE NO.	CL631-0057-5-71

0 1/1

FORM HC0011-5-7

HRS DRAWING FOR REFERENCE